US 20230419546A1

(19) **United States**

(12) **Patent Application Publication** (10) **Pub. No.: US 2023/0419546 A1**

Christopher et al. (43) **Pub. Date: Dec. 28, 2023**

(54) **ONLINE CAMERA CALIBRATION FOR A MOBILE ROBOT**

(71) Applicant: **Boston Dynamics, Inc.**, Waltham, MA (US)

(72) Inventors: **Christopher Christopher**, Bedford, MA (US); **Dion Gonano**, Somerville, MA (US)

(73) Assignee: **Boston Dynamics, Inc.**, Waltham, MA (US)

(21) Appl. No.: **18/335,661**

(22) Filed: **Jun. 15, 2023**

Related U.S. Application Data

(60) Provisional application No. 63/354,762, filed on Jun. 23, 2022.

Publication Classification

(51) **Int. Cl.**

G06T 7/80	(2006.01)
G06V 10/20	(2006.01)
G06T 7/70	(2006.01)

(52) **U.S. Cl.**

CPC ***G06T 7/85*** (2017.01); ***G06V 10/255*** (2022.01); ***G06T 7/70*** (2017.01); *G06T 2207/30244* (2013.01)

(57) **ABSTRACT**

Methods and apparatus for online camera calibration are provided. The method comprises receiving a first image captured by a first camera of a robot, wherein the first image includes an object having at least one known dimension, receiving a second image captured by a second camera of the robot, wherein the second image includes the object, wherein a field of view of the first camera and a field of view of the second camera at least partially overlap, projecting a plurality of points on the object in the first image to pixel locations in the second image, and determining, based on pixel locations of the plurality of points on the object in second image and the projected plurality of points on the object, a reprojection error.

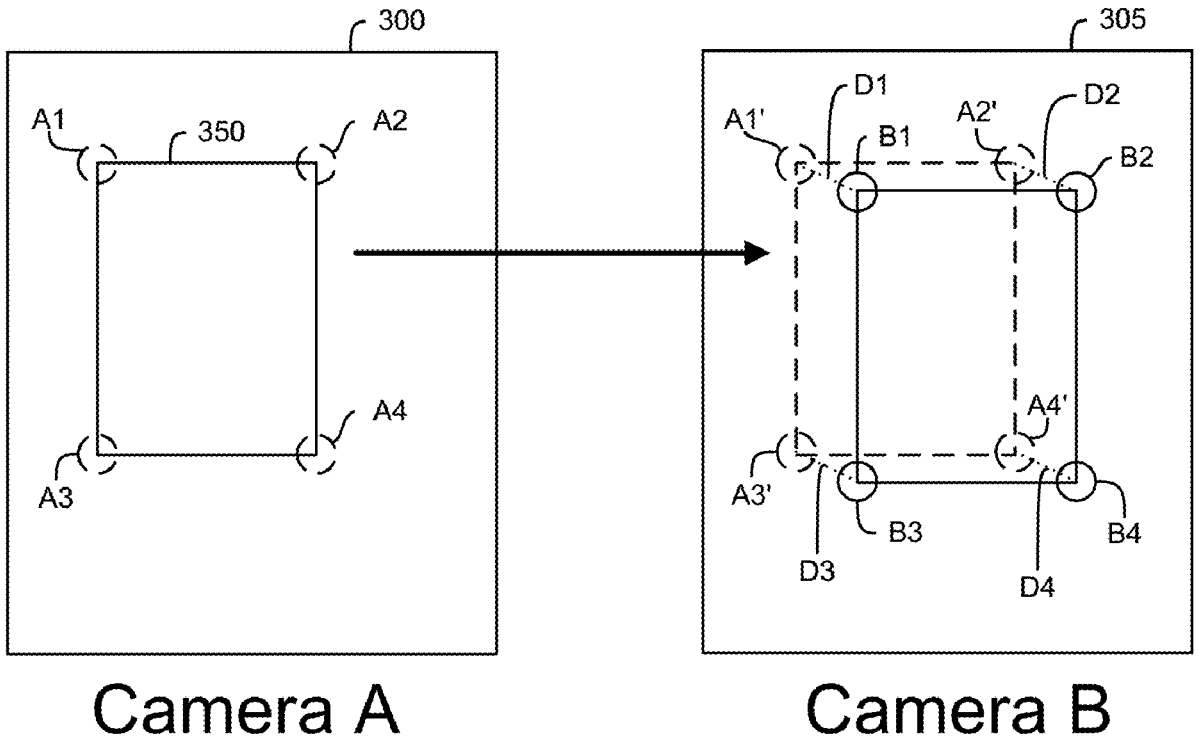

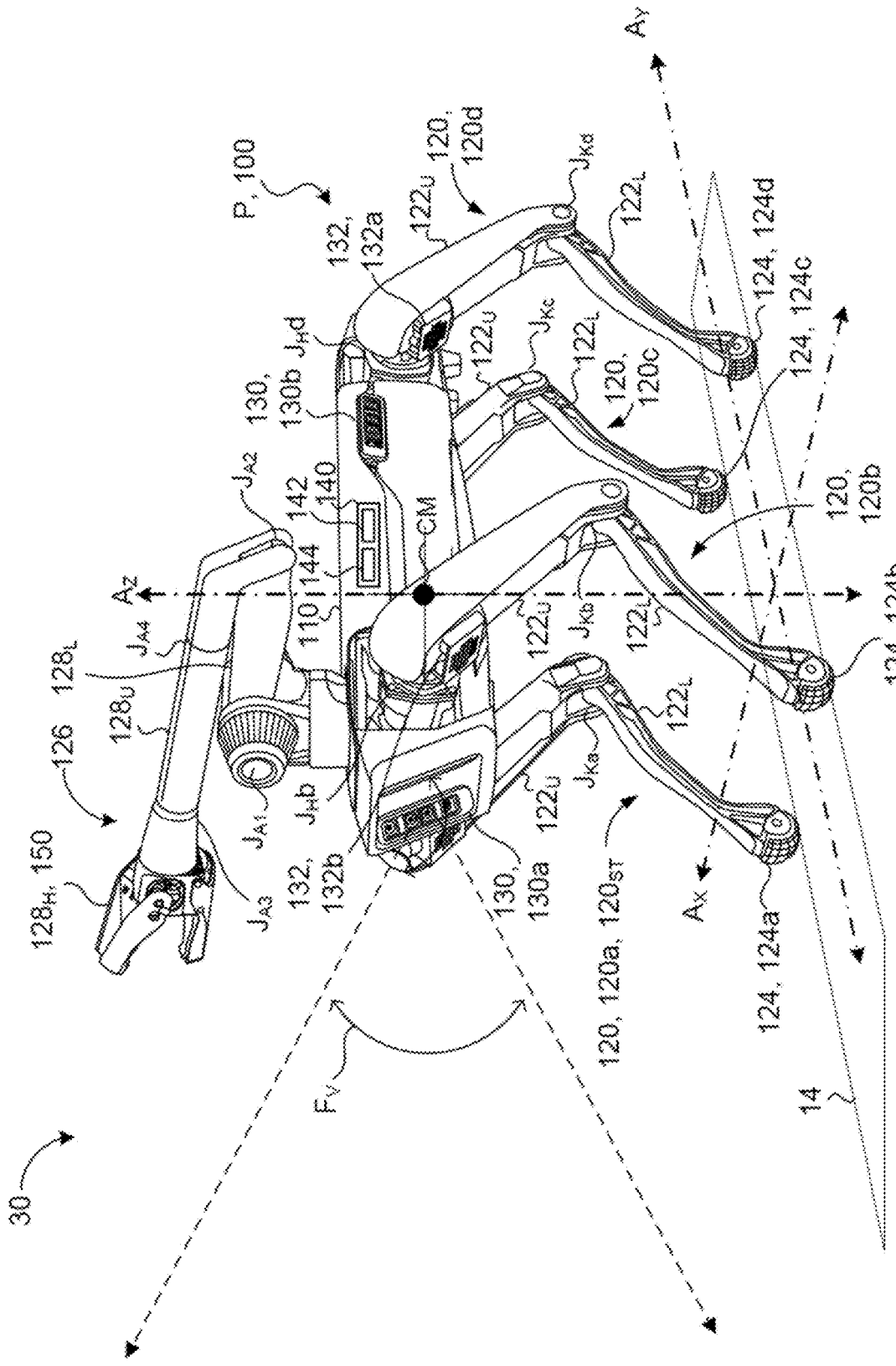
30
P, 100
132, 132a
120, 120d
122U
122L
Jkd
124, 124d
124, 124c
120, 120c
Jkc
Jkb
Jka
120, 120b
124, 124b
130, 130b
JHd
JA2
142
140
CM
144
110
AZ
AY
AX
JA4
128L
128U
126
JA1
JHb
JA3
128H, 150
132, 132b
130, 130a
120, 120a, 120ST
124, 124a
FV
14

FIG. 1A

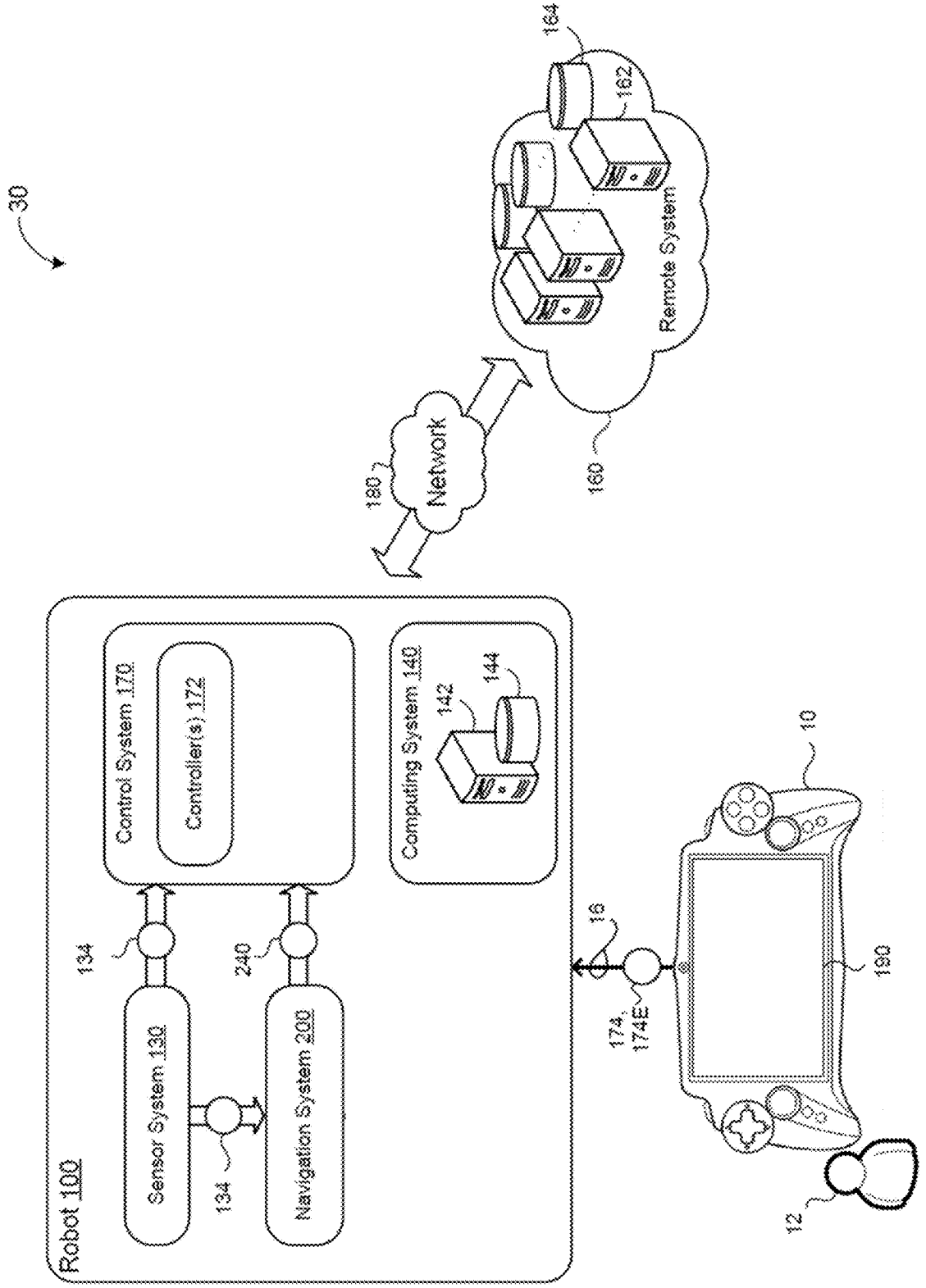
30
164
162
Remote System
160
180
Network
Robot 100
Control System 170
Controller(s) 172
Computing System 140
142
144
134
240
Sensor System 130
134
Navigation System 200
16
174,
174E
10
190
12

FIG. 1B

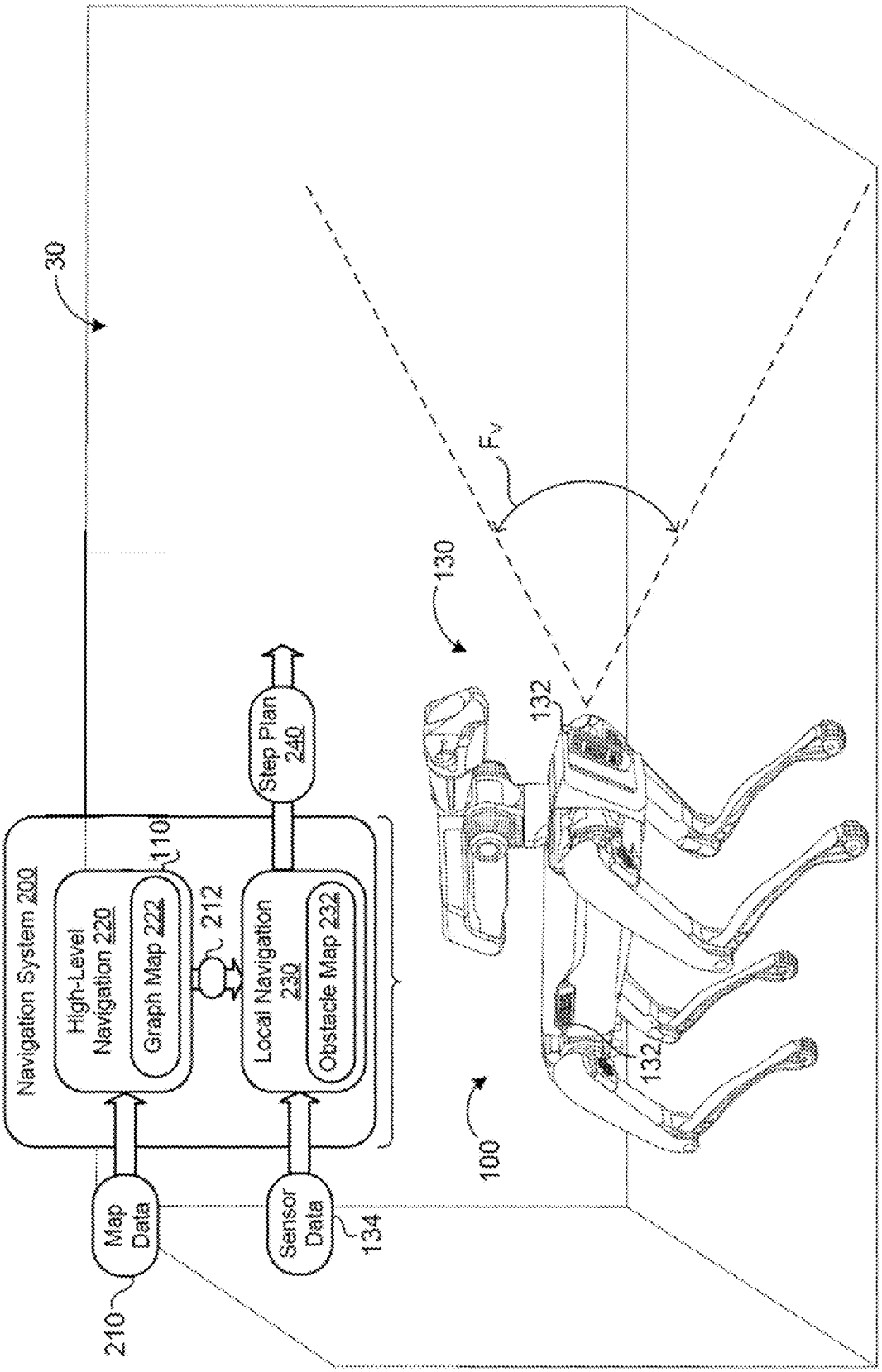
30
Navigation System 200
High-Level Navigation 220
Graph Map 222
110
212
Local Navigation 230
Obstacle Map 232
Step Plan 240
Map Data
Sensor Data
210
134
100
130
132
132
F_V

FIG. 2A

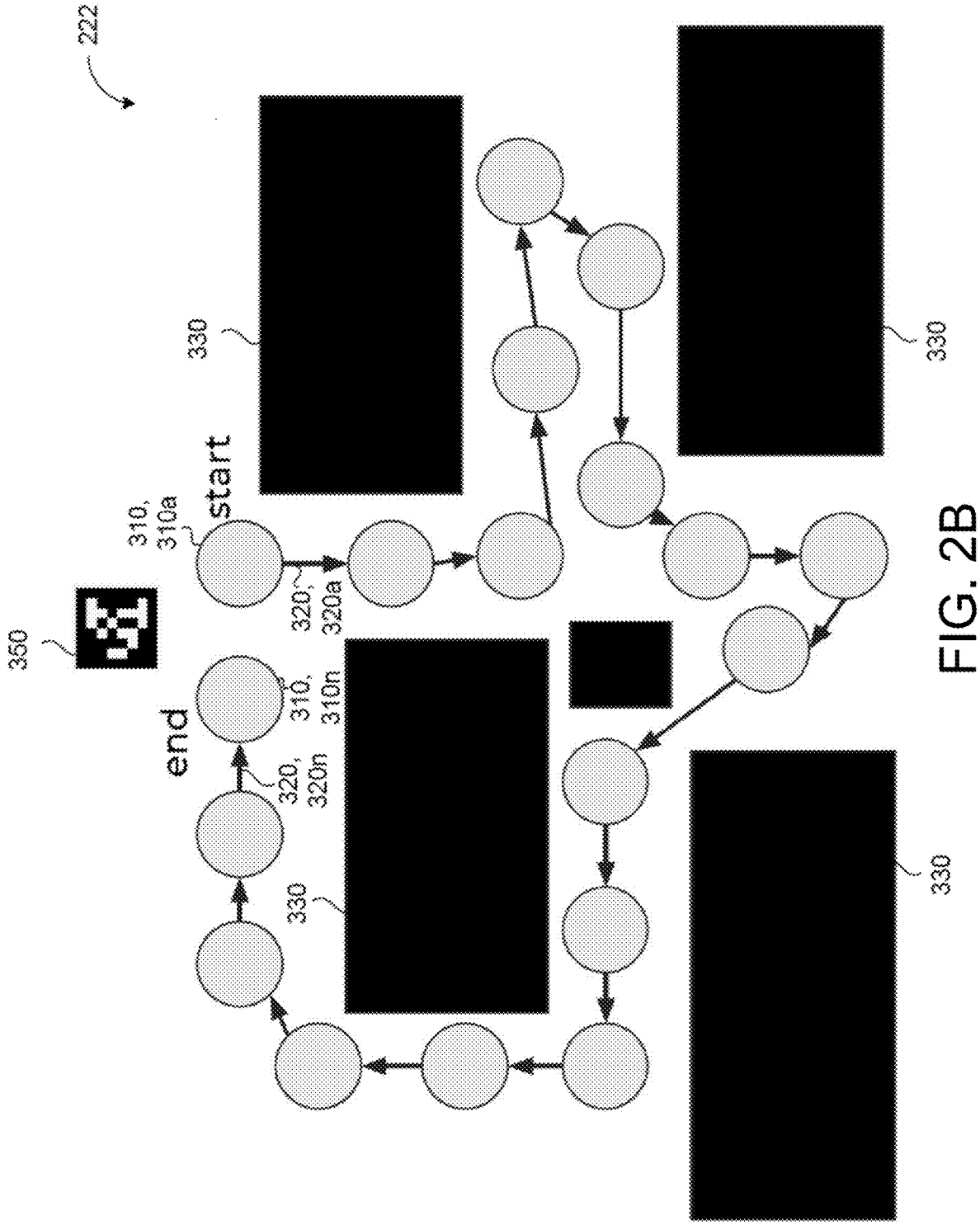
222
330
330
start
310, 310a
320, 320a
350
end
310, 310n
320, 320n
330
330

FIG. 2B

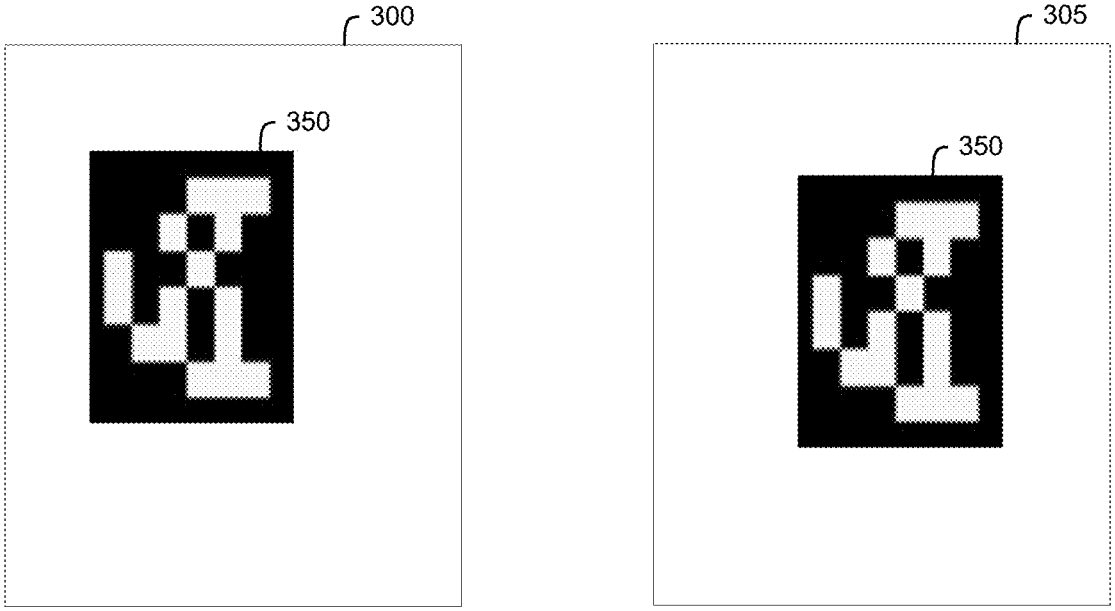
300
350
305
350
Camera A
Camera B

FIG. 3A

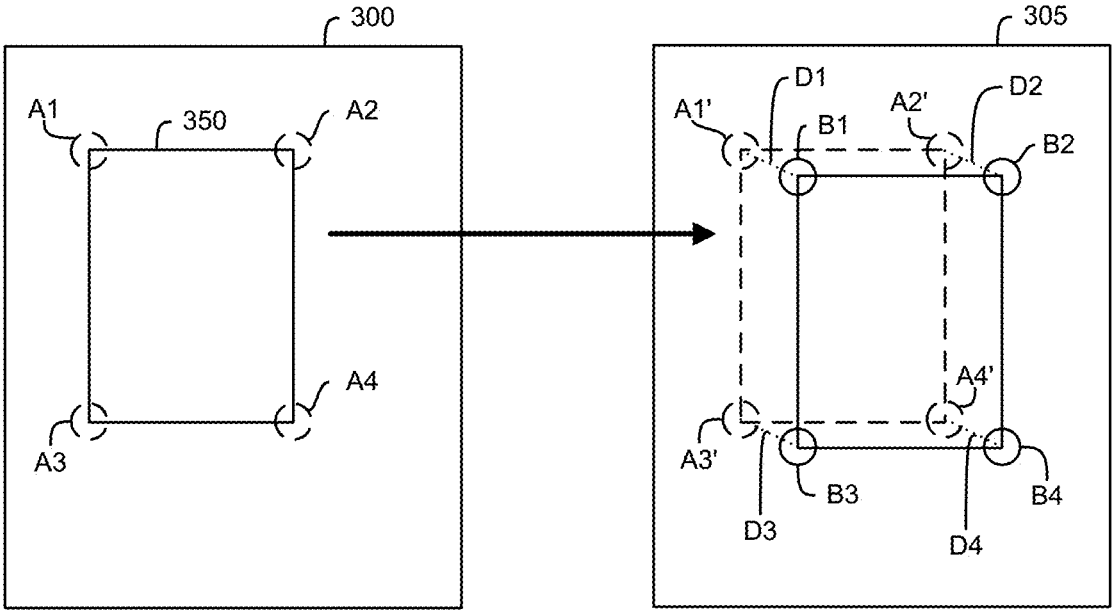
300
A1
350
A2
A4
A3
305
D1
A1'
B1
A2'
D2
B2
A4'
A3'
B3
B4
D3
D4
Camera A
Camera B

FIG. 3B

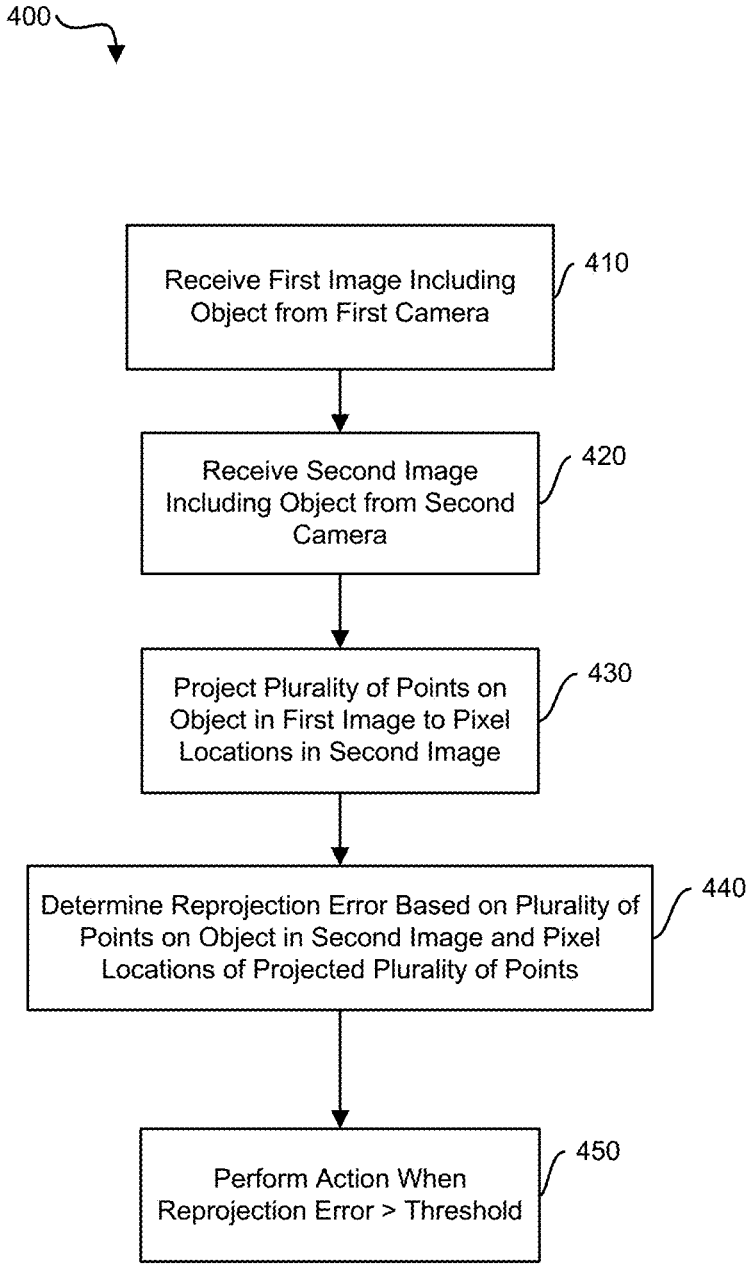
400
Receive First Image Including Object from First Camera
410
Receive Second Image Including Object from Second Camera
420
Project Plurality of Points on Object in First Image to Pixel Locations in Second Image
430
Determine Reprojection Error Based on Plurality of Points on Object in Second Image and Pixel Locations of Projected Plurality of Points
440
Perform Action When Reprojection Error > Threshold
450

FIG. 4

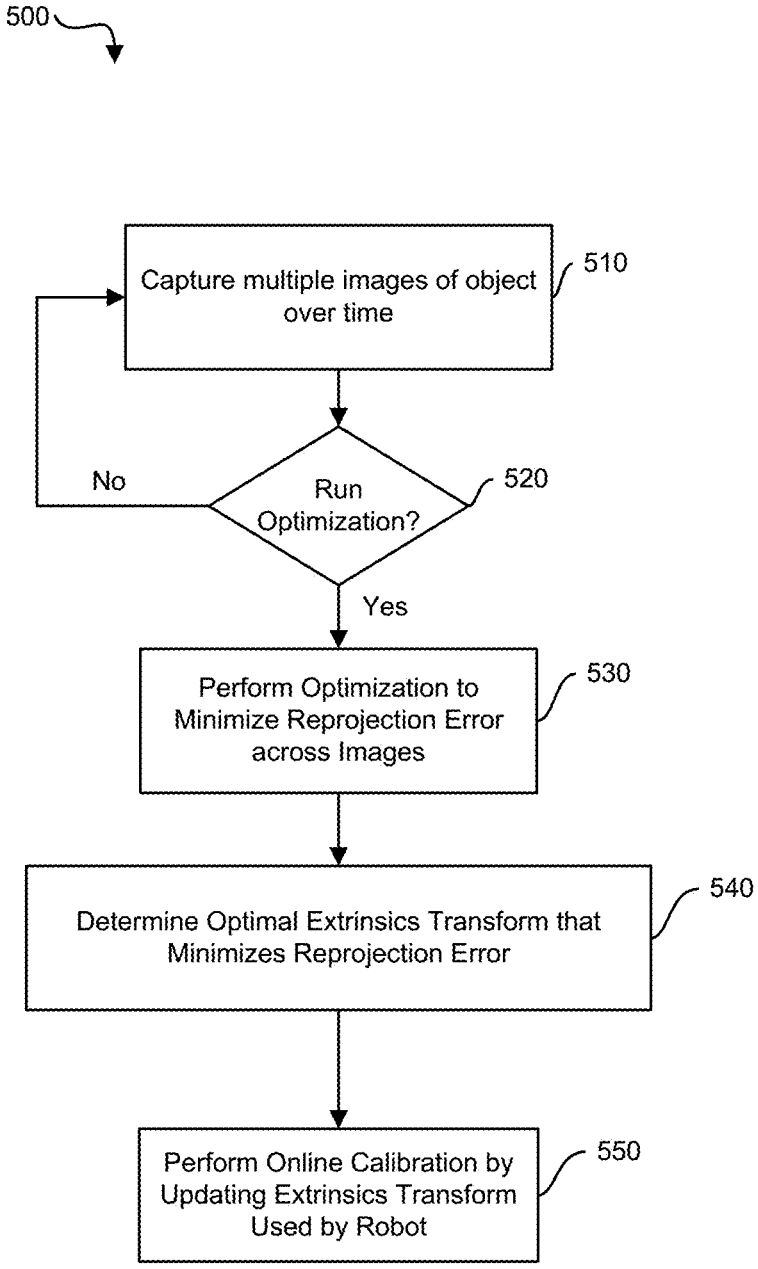
500
Capture multiple images of object over time
510
Run Optimization?
520
No
Yes
Perform Optimization to Minimize Reprojection Error across Images
530
Determine Optimal Extrinsics Transform that Minimizes Reprojection Error
540
Perform Online Calibration by Updating Extrinsics Transform Used by Robot
550

FIG. 5

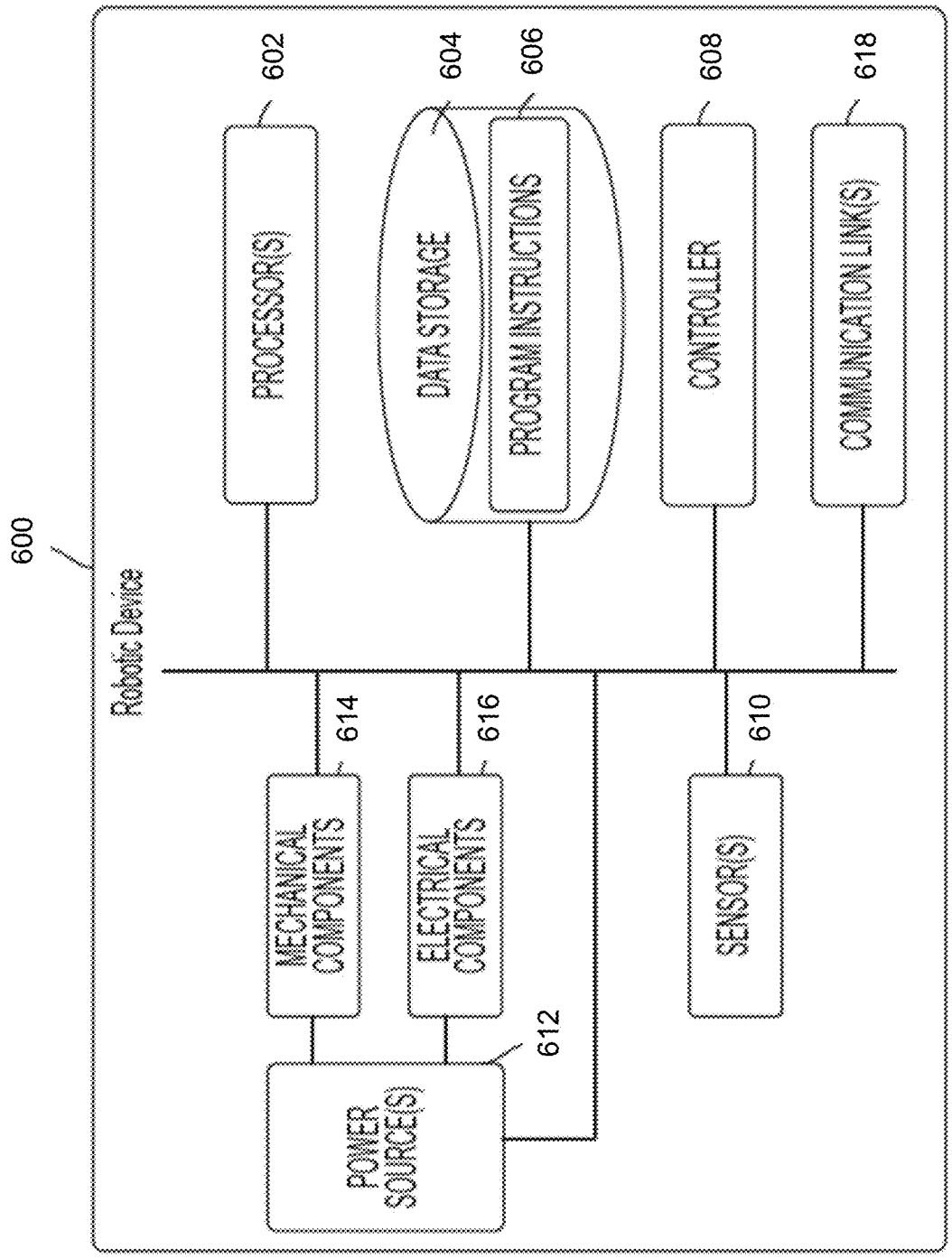
600
Robotic Device
602
PROCESSOR(S)
604
DATA STORAGE
606
PROGRAM INSTRUCTIONS
608
CONTROLLER
618
COMMUNICATION LINK(S)
614
MECHANICAL COMPONENTS
616
ELECTRICAL COMPONENTS
610
SENSOR(S)
612
POWER SOURCE(S)

FIG. 6

ONLINE CAMERA CALIBRATION FOR A MOBILE ROBOT

RELATED APPLICATIONS

[0001] This application claims the benefit under 35 U.S.C. § 119(e) of U.S. Provisional Patent Application Ser. No. 63/354,762, filed Jun. 23, 2022, and entitled, "ONLINE CAMERA CALIBRATION FOR A MOBILE ROBOT," the entire contents of which is incorporated herein by reference.

BACKGROUND

[0002] A robot is generally a reprogrammable and multifunctional manipulator, often designed to move material, parts, tools, or specialized devices through variable programmed motions for performance of tasks. Robots may be manipulators that are physically anchored (e.g., industrial robotic arms), mobile robots that move throughout an environment (e.g., using legs, wheels, or traction-based mechanisms), or some combination of a manipulator and a mobile robot. Robots are utilized in a variety of industries including, for example, manufacturing, warehouse logistics, transportation, hazardous environments, exploration, and healthcare.

SUMMARY

[0003] In some embodiments, a method is provided. The method comprises receiving a first image captured by a first camera of a robot, wherein the first image includes an object having at least one known dimension, receiving a second image captured by a second camera of the robot, wherein the second image includes the object, wherein a field of view of the first camera and a field of view of the second camera at least partially overlap, projecting a plurality of points on the object in the first image to pixel locations in the second image, and determining, based on pixel locations of the plurality of points on the object in second image and the projected plurality of points on the object, a reprojection error.

[0004] In one aspect, the object includes a plurality of corner points, and wherein the plurality of points on the object projected to pixel locations in the second image includes at least two of the plurality of corner points. In one aspect, the object is a rectangle having four corner points, and wherein the plurality of points on the object projected to pixel locations in the second image includes the four corner points of the rectangle. In one aspect, the object is a fiducial marker in an environment of the robot. In one aspect, the fiducial marker is an AprilTag.

[0005] In one aspect, determining the reprojection error comprises calculating, for each of the plurality of points on the object, a first distance between the point on the object in the second image and the pixel location of the corresponding projected point in the second image, and determining the reprojection error based on the calculated first distances. In one aspect, determining the reprojection error based on the calculated distances comprises calculating a second distance of a longest edge of the object along two of the plurality of points on the object, dividing each of the calculated first distances by the second distance to generate normalized first distances, and determining the reprojection error as an average of the normalized first distances. In one aspect, the first camera is a vision camera and the second camera is a depth camera. In one aspect, the depth camera is a stereo vision camera.

[0006] In one aspect, the method further comprises generating an instruction to perform an action when the reprojection error is greater than a threshold value. In one aspect, generating an instruction to perform an action when the reprojection error is greater than a threshold value comprises generating an alert. In one aspect, generating an instruction to perform an action when the reprojection error is greater than a threshold value comprises generating an instruction to stop autonomous navigation of the robot. In one aspect, generating an instruction to perform an action comprises generating an instruction to calibrate one or more parameters associated with the first camera and/or the second camera based on the reprojection error. In one aspect, calibrating one or more parameters associated with the first camera and/or the second camera comprises updating a lens model for one or both of the first camera and/or the second camera. In one aspect, the robot is configured to use an extrinsics transform to relate a first coordinate system of the first camera to a second coordinate system of the second camera, and calibrating one or more parameters associated with the first camera and/or the second camera comprises updating the extrinsics transform. In one aspect, updating the extrinsics transform comprises capturing a set of first images from the first camera, wherein each of the first images in the set includes the object, capturing a set of second images from the second camera, wherein each of the second images in the set includes the object, each of the first images having a corresponding second image in the set of second image taken at a same time as the first image using a same pose, performing a non-linear optimization over the first set of images and the second set of images to minimize the reprojection error for pairs of images from the first set and the second set, wherein an output of the non-linear optimization is a current extrinsics transform, and updating the extrinsics transform used by the robot based on the current extrinsics transform output from the non-linear optimization. In one aspect, the method further comprises determining a pose of the robot using the updated extrinsics transform.

[0007] In some embodiments, a robot is provided. The robot comprises a perception system including a first camera configured to capture a first image, wherein the first image includes an object having at least one known dimension, and a second camera configured to capture a second image, wherein the second image includes the object, wherein a field of view of the first camera and a field of view of the second camera at least partially overlap. The robot further comprises at least one computer processor configured to project a plurality of points on the object in the first image to pixel locations in the second image, and determine, based on pixel locations of the plurality of points on the object in second image and the projected plurality of points on the object, a reprojection error.

[0008] In one aspect, the object includes a plurality of corner points, and wherein the plurality of points on the object projected to pixel locations in the second image includes at least two of the plurality of corner points. In one aspect, the object is a rectangle having four corner points, and wherein the plurality of points on the object projected to pixel locations in the second image includes the four corner points of the rectangle. In one aspect, the object is a fiducial marker in an environment of the robot. In one aspect, the fiducial marker is an AprilTag.

[0009] In one aspect, determining the reprojection error comprises calculating, for each of the plurality of points on the object, a first distance between the point on the object in the second image and the pixel location of the corresponding projected point in the second image, and determining the reprojection error based on the calculated first distances. In one aspect, determining the reprojection error based on the calculated distances comprises calculating a second distance of a longest edge of the object along two of the plurality of points on the object, dividing each of the calculated first distances by the second distance to generate normalized first distances, and determining the reprojection error as an average of the normalized first distances. In one aspect, the first camera is a vision camera and the second camera is a depth camera. In one aspect, the depth camera is a stereo vision camera.

[0010] In one aspect, the at least one computer processor is further configured to generate an instruction to perform an action when the reprojection error is greater than a threshold value. In one aspect, generating an instruction to perform an action when the reprojection error is greater than a threshold value comprises generating an alert. In one aspect, generating an instruction to perform an action when the reprojection error is greater than a threshold value comprises generating an instruction to stop autonomous navigation of the robot. In one aspect, generating an instruction to perform an action comprises generating an instruction to calibrate one or more parameters associated with the first camera and/or the second camera based on the reprojection error. In one aspect, calibrating one or more parameters associated with the first camera and/or the second camera comprises updating a lens model for one or both of the first camera and/or the second camera.

[0011] In one aspect, the robot is configured to use an extrinsics transform to relate a first coordinate system of the first camera to a second coordinate system of the second camera, and calibrating one or more parameters associated with the first camera and/or the second camera comprises updating the extrinsics transform. In one aspect, updating the extrinsics transform comprises capturing a set of first images from the first camera, wherein each of the first images in the set includes the object, capturing a set of second images from the second camera, wherein each of the second images in the set includes the object, each of the first images having a corresponding second image in the set of second image taken at a same time as the first image using a same pose, performing a non-linear optimization over the first set of images and the second set of images to minimize the reproj ection error for pairs of images from the first set and the second set, wherein an output of the non-linear optimization is a current extrinsics transform, and updating the extrinsics transform used by the robot based on the current extrinsics transform output from the non-linear optimization. In one aspect, the at least one computer processor is further configured to determine a pose of the robot using the updated extrinsics transform. In one aspect, the first camera and the second camera are mounted on a same substrate.

[0012] In some embodiments, a non-transitory computer readable medium is provided. The non-transitory computer readable medium is encoded with a plurality of instructions that, when executed by at least one computer processor perform a method. The method comprises receiving a first image captured by a first camera of a robot, wherein the first image includes an object having at least one known dimension, receiving a second image captured by a second camera of the robot, wherein the second image includes the object, wherein a field of view of the first camera and a field of view of the second camera at least partially overlap, projecting a plurality of points on the object in the first image to pixel locations in the second image, and determining, based on pixel locations of the plurality of points on the object in second image and the projected plurality of points on the object, a reprojection error.

[0013] In one aspect, the object includes a plurality of corner points, and wherein the plurality of points on the object projected to pixel locations in the second image includes at least two of the plurality of corner points. In one aspect, the object is a rectangle having four corner points, and wherein the plurality of points on the object projected to pixel locations in the second image includes the four corner points of the rectangle. In one aspect, the object is a fiducial marker in an environment of the robot. In one aspect, the fiducial marker is an AprilTag.

[0014] In one aspect, determining the reprojection error comprises calculating, for each of the plurality of points on the object, a first distance between the point on the object in the second image and the pixel location of the corresponding projected point in the second image, and determining the reprojection error based on the calculated first distances. In one aspect, determining the reprojection error based on the calculated distances comprises calculating a second distance of a longest edge of the object along two of the plurality of points on the object, dividing each of the calculated first distances by the second distance to generate normalized first distances, and determining the reprojection error as an average of the normalized first distances. In one aspect, the first camera is a vision camera and the second camera is a depth camera. In one aspect, the depth camera is a stereo vision camera.

[0015] In one aspect, the method further comprises generating an instruction to perform an action when the reprojection error is greater than a threshold value. In one aspect, generating an instruction to perform an action when the reprojection error is greater than a threshold value comprises generating an alert. In one aspect, generating an instruction to perform an action when the reprojection error is greater than a threshold value comprises generating an instruction to stop autonomous navigation of the robot. In one aspect, generating an instruction to perform an action comprises generating an instruction to calibrate one or more parameters associated with the first camera and/or the second camera based on the reprojection error. In one aspect, calibrating one or more parameters associated with the first camera and/or the second camera comprises updating a lens model for one or both of the first camera and/or the second camera.

[0016] In one aspect, the robot is configured to use an extrinsics transform to relate a first coordinate system of the first camera to a second coordinate system of the second camera, and calibrating one or more parameters associated with the first camera and/or the second camera comprises updating the extrinsics transform. In one aspect, updating the extrinsics transform comprises capturing a set of first images from the first camera, wherein each of the first images in the set includes the object, capturing a set of second images from the second camera, wherein each of the second images in the set includes the object, each of the first images having a corresponding second image in the set of

second image taken at a same time as the first image using a same pose, performing a non-linear optimization over the first set of images and the second set of images to minimize the reproj ection error for pairs of images from the first set and the second set, wherein an output of the non-linear optimization is a current extrinsics transform, and updating the extrinsics transform used by the robot based on the current extrinsics transform output from the non-linear optimization. In one aspect, the method further comprises determining a pose of the robot using the updated extrinsics transform.

[0017] The foregoing apparatus and method embodiments may be implemented with any suitable combination of aspects, features, and acts described above or in further detail below. These and other aspects, embodiments, and features of the present teachings can be more fully understood from the following description in conjunction with the accompanying drawings.

BRIEF DESCRIPTION OF DRAWINGS

[0018] Various aspects and embodiments will be described with reference to the following figures. It should be appreciated that the figures are not necessarily drawn to scale. In the drawings, each identical or nearly identical component that is illustrated in various figures is represented by a like numeral. For purposes of clarity, not every component may be labeled in every drawing.

[0019] FIG. **1**A is a schematic view of an example robot for navigating through an environment;

[0020] FIG. **1**B is a schematic view of a navigation system for navigating a robot such as the robot of FIG. **1**A;

[0021] FIG. **2**A is a schematic view of exemplary components of a navigation system such as the navigation system illustrated in FIG. **1**B;

[0022] FIG. **2**B is a schematic view of a topological map that may be used for navigating a robot such as the robot of FIG. **1**A;

[0023] FIG. **3**A schematically illustrates a first and second images captured by first and second cameras having at least partially overlapping fields of view, in accordance with some embodiments of the present disclosure;

[0024] FIG. **3**B schematically illustrates a technique for projecting points on an object in a first image to pixel locations in a second image, in accordance with some embodiments of the present disclosure;

[0025] FIG. **4** is a flowchart of a process for performing an action based on a calibration error, in accordance with some embodiments of the present disclosure;

[0026] FIG. **5** is a flowchart of a process for performing online camera calibration, in accordance with some embodiments of the present disclosure; and

[0027] FIG. **6** is a block diagram of components of a robot on which some embodiments of the present disclosure may be implemented.

DETAILED DESCRIPTION

[0028] Some robots are used to navigate environments to perform a variety of tasks or functions. These robots are often operated to perform a "mission" by navigating the robot through an environment. The mission is sometimes recorded so that the robot can again perform the mission at a later time. In some missions, a robot both navigates through and interacts with the environment. The interaction sometimes takes the form of gathering data using one or more sensors.

[0029] As discussed further herein, the one or more sensors associated with the robot may include multiple (e.g., at least two) cameras with at least partially overlapping fields of view, and the multiple cameras may be configured to capture images of the environment of the robot. The multiple cameras may include, for example, a visual camera configured to capture color (e.g., red-blue-green (RGB)) images of the environment and a depth camera (e.g., a stereo camera) configured to capture distance information from the camera to points in the environment. The images captured by the multiple cameras may be used to generate a three-dimensional representation of objects in the environment of the robot. The three-dimensional representation may be used to facilitate localization and/or navigation within the environment to, for instance, execute a mission. Occasionally (e.g., once a day, once a month), each of the multiple cameras may be calibrated using a calibration routine to ensure that the information included in the images captured from each of the cameras is spatially aligned to facilitate generation of an accurate three-dimensional representation of the robot's environment.

[0030] Due to a variety of factors (e.g., mechanical deformation of a substrate on which the cameras are mounted, thermal expansion/contraction, etc.) the calibration of the cameras relative to each other (e.g., a set of extrinsics parameters relating the cameras) may become degraded, such that points on an object captured in a first image by a first camera are represented at pixel locations in the first image that when projected (e.g., using the set of extrinsics parameters relating the cameras) to pixel locations of the object in a second image captured by a second camera are inconsistent, where the first and second images are captured at the same time. Introduction of such cross-camera calibration errors can result in performance issues for the robot such as, but not limited to, reduced localization accuracy, poor fiducial detection accuracy, and unreliable robot docking. Accordingly, some embodiments of the present disclosure relate to techniques for assessing a calibration error for multiple cameras with at least partially overlapping fields of view and performing an action when the calibration error exceeds a threshold. For instance, the action may be to perform online or "on-the-fly" calibration of the cameras, without requiring the robot to pause its normal activity and execute an explicit calibration routine.

[0031] Referring to FIGS. **1**A and **1**B, in some implementations, a robot **100** includes a body **110** with locomotion based structures such as legs **120***a-d* coupled to the body **110** that enable the robot **100** to move through the environment **30**. In some examples, each leg **120** is an articulable structure such that one or more joints J permit members **122** of the leg **120** to move. For instance, each leg **120** includes a hip joint J_H coupling an upper member **122**, **122**U of the leg **120** to the body **110** and a knee joint J_K coupling the upper member **122**U of the leg **120** to a lower member **122**L of the leg **120**. Although FIG. **1**A depicts a quadruped robot with four legs **120***a-d*, the robot **100** may include any number of legs or locomotive based structures (e.g., a biped or humanoid robot with two legs, or other arrangements of one or more legs) that provide a means to traverse the terrain within the environment **30**.

[0032] In order to traverse the terrain, each leg **120** has a distal end **124** that contacts a surface of the terrain (i.e., a traction surface). In other words, the distal end **124** of the leg **120** is the end of the leg **120** used by the robot **100** to pivot, plant, or generally provide traction during movement of the robot **100**. For example, the distal end **124** of a leg **120** corresponds to a foot of the robot **100**. In some examples, though not shown, the distal end **124** of the leg **120** includes an ankle joint J_A such that the distal end **124** is articulable with respect to the lower member **122**L of the leg **120**.

[0033] In the examples shown, the robot **100** includes an arm **126** that functions as a robotic manipulator. The arm **126** may be configured to move about multiple degrees of freedom in order to engage elements of the environment **30** (e.g., objects within the environment **30**). In some examples, the arm **126** includes one or more members **128**, where the members **128** are coupled by joints J such that the arm **126** may pivot or rotate about the joint(s) J. For instance, with more than one member **128**, the arm **126** may be configured to extend or to retract. To illustrate an example, FIG. **1**A depicts the arm **126** with three members **128** corresponding to a lower member $\mathbf{128}_L$, an upper member $\mathbf{128}_U$, and a hand member $\mathbf{128}_H$ (e.g., shown as an end-effector **150**). Here, the lower member $\mathbf{128}_L$ may rotate or pivot about a first arm joint J_{A1} located adjacent to the body **110** (e.g., where the arm **126** connects to the body **110** of the robot **100**). The lower member $\mathbf{128}_L$ is coupled to the upper member $\mathbf{128}_U$ at a second arm joint J_{A2} and the upper member $\mathbf{128}_U$ is coupled to the hand member $\mathbf{128}_H$ at a third arm joint J_{A3}. In some examples, such as FIG. **1**A, the hand member $\mathbf{128}_H$ or end-effector **150** is a mechanical gripper that includes a moveable jaw and a fixed jaw configured to perform different types of grasping of elements within the environment **30**. The moveable jaw is configured to move relative to the fixed jaw to move between an open position for the gripper and a closed position for the gripper. In some implementations, the arm **126** additionally includes a fourth joint J_{A4}. The fourth joint J_{A4} may be located near the coupling of the lower member $\mathbf{128}_L$ to the upper member $\mathbf{128}_U$ and function to allow the upper member $\mathbf{128}_U$ to twist or rotate relative to the lower member $\mathbf{128}_L$. In other words, the fourth joint J_{A4} may function as a twist joint similarly to the third joint J_{A3} or wrist joint of the arm **126** adjacent the hand member $\mathbf{128}_H$. For instance, as a twist joint, one member coupled at the joint J may move or rotate relative to another member coupled at the joint J (e.g., a first member coupled at the twist joint is fixed while the second member coupled at the twist joint rotates). In some implementations, the arm **126** connects to the robot **100** at a socket on the body **110** of the robot **100**. In some configurations, the socket is configured as a connector such that the arm **126** attaches or detaches from the robot **100** depending on whether the arm **126** is needed for operation.

[0034] The robot **100** has a vertical gravitational axis (e.g., shown as a Z-direction axis A_Z) along a direction of gravity, and a center of mass CM, which is a position that corresponds to an average position of all parts of the robot **100** where the parts are weighted according to their masses (i.e., a point where the weighted relative position of the distributed mass of the robot **100** sums to zero). The robot **100** further has a pose P based on the CM relative to the vertical gravitational axis A_Z (i.e., the fixed reference frame with respect to gravity) to define a particular attitude or stance assumed by the robot **100**. The attitude of the robot **100** can be defined by an orientation or an angular position of the robot **100** in space. Movement by the legs **120** relative to the body **110** alters the pose P of the robot **100** (i.e., the combination of the position of the CM of the robot and the attitude or orientation of the robot **100**). Here, a height generally refers to a distance along the z-direction. The sagittal plane of the robot **100** corresponds to the Y-Z plane extending in directions of a y-direction axis A_Y and the z-direction axis A_Z. In other words, the sagittal plane bisects the robot **100** into a left and a right side. Generally perpendicular to the sagittal plane, a ground plane (also referred to as a transverse plane) spans the X-Y plane by extending in directions of the x-direction axis A_X and the y direction axis A_Y. The ground plane refers to a ground surface **14** where distal ends **124** of the legs **120** of the robot **100** may generate traction to help the robot **100** move about the environment **30**. Another anatomical plane of the robot **100** is the frontal plane that extends across the body **110** of the robot **100** (e.g., from a left side of the robot **100** with a first leg **120***a* to a right side of the robot **100** with a second leg **120***b*). The frontal plane spans the X-Z plane by extending in directions of the x-direction axis A_X and the z direction axis A_Z.

[0035] In order to maneuver about the environment **30** or to perform tasks using the arm **126**, the robot **100** includes a sensor system **130** with one or more sensors **132**, **132***a-n* (e.g., shown as a first sensor **132**, **132***a* and a second sensor **132**, **132***b*). The sensors **132** may include vision/image sensors, inertial sensors (e.g., an inertial measurement unit (IMU)), force sensors, and/or kinematic sensors. Some examples of sensors **132** include a camera such as a visual camera (e.g., an RGB camera), stereo camera, a scanning light-detection and ranging (LIDAR) sensor, or a scanning laser-detection and ranging (LADAR) sensor. In some examples, the sensor **132** has a corresponding field(s) of view F_V defining a sensing range or region corresponding to the sensor **132**. For instance, FIG. **1**A depicts a field of a view F_V for the robot **100**. Each sensor **132** may be pivotable and/or rotatable such that the sensor **132**, for example, changes its field of view F_V about one or more axis (e.g., an x-axis, a y-axis, or a z-axis in relation to a ground plane).

[0036] When surveying a field of view F_V with a sensor **132**, the sensor system **130** generates sensor data **134** (also referred to herein as image data) corresponding to the field of view F_V. The sensor system **130** may generate the field of view F_V with a sensor **132** mounted on or near the body **110** of the robot **100** (e.g., sensor(s) **132***a*, **132***b*). The sensor system may additionally and/or alternatively generate the field of view F_V with a sensor **132** mounted at or near the end-effector **150** of the arm **126** (e.g., sensor(s) **132***c*). The one or more sensors **132** capture the sensor data **134** that defines a three-dimensional point cloud for the area within the environment **30** about the robot **100**. In some examples, the sensor data **134** is image data that corresponds to a three-dimensional volumetric point cloud generated by a three-dimensional volumetric image sensor **132**. In some embodiments, sensor system **130** includes multiple cameras having at least partially overlapping fields of view. For instance, sensor system **130** may include a visual camera (e.g., an RGB camera) configured to capture a 2D representation of the environment and a stereo camera configured to capture depth information. The visual camera and the stereo camera may have at least partially overlapping fields of view, and the images captured by the two cameras may be used to generate the three-dimensional point cloud. Because

the two cameras are not precisely co-located, the sensor system **130** (or some other component of robot **100**) may store a set of extrinsics parameters (e.g., an extrinsics transform) that relates a coordinate system of images captured by the first camera (e.g., the visual camera) and a coordinate system of images captured by the second camera (e.g., the stereo camera). The stored set of extrinsics parameters may be used, among other things, to generate the three-dimensional point cloud or determine the pose of the robot **100**.

[0037] Additionally or alternatively, when the robot **100** is maneuvering about the environment **30**, the sensor system **130** gathers pose data for the robot **100** that includes inertial measurement data (e.g., measured by an IMU). In some examples, the pose data includes kinematic data and/or orientation data about the robot **100**, for instance, kinematic data and/or orientation data about joints J or other portions of a leg **120** or arm **126** of the robot **100**. With the sensor data **134**, various systems of the robot **100** may use the sensor data **134** to define a current state of the robot **100** (e.g., of the kinematics of the robot **100**) and/or a current state of the environment **30** about the robot **100**.

[0038] In some implementations, the sensor system **130** includes sensor(s) **132** coupled to a joint J. Moreover, these sensors **132** may couple to a motor M that operates a joint J of the robot **100** (e.g., sensors **132**, **132***a-b*). Here, these sensors **132** generate joint dynamics in the form of joint-based sensor data **134**. Joint dynamics collected as joint-based sensor data **134** may include joint angles (e.g., an upper member $\mathbf{122}_U$ relative to a lower member $\mathbf{122}_L$ or hand member $\mathbf{126}_H$ relative to another member of the arm **126** or robot **100**), joint speed, joint angular velocity, joint angular acceleration, and/or forces experienced at a joint J (also referred to as joint forces). Joint-based sensor data generated by one or more sensors **132** may be raw sensor data, data that is further processed to form different types of joint dynamics, or some combination of both. For instance, a sensor **132** measures joint position (or a position of member(s) **122** coupled at a joint J) and systems of the robot **100** perform further processing to derive velocity and/or acceleration from the positional data. In other examples, a sensor **132** is configured to measure velocity and/or acceleration directly.

[0039] As the sensor system **130** gathers sensor data **134**, a computing system **140** stores, processes, and/or to communicates the sensor data **134** to various systems of the robot **100** (e.g., the control system **170**, a navigation system **200**, and/or remote controller **10**). In order to perform computing tasks related to the sensor data **134**, the computing system **140** of the robot **100** includes data processing hardware **142** and memory hardware **144**. The data processing hardware **142** is configured to execute instructions stored in the memory hardware **144** to perform computing tasks related to activities (e.g., movement and/or movement based activities) for the robot **100**. Generally speaking, the computing system **140** refers to one or more locations of data processing hardware **142** and/or memory hardware **144**.

[0040] In some examples, the computing system **140** is a local system located on the robot **100**. When located on the robot **100**, the computing system **140** may be centralized (i.e., in a single location/area on the robot **100**, for example, the body **110** of the robot **100**), decentralized (i.e., located at various locations about the robot **100**), or a hybrid combination of both (e.g., where a majority of centralized hardware and a minority of decentralized hardware). To illustrate some differences, a decentralized computing system **140** may allow processing to occur at an activity location (e.g., at motor that moves a joint of a leg **120**), whereas a centralized computing system **140** may allow for a central processing hub that communicates to systems located at various positions on the robot **100** (e.g., communicate to the motor that moves the joint of the leg **120**).

[0041] Additionally or alternatively, the computing system **140** includes computing resources that are located remote from the robot **100**. For instance, the computing system **140** communicates via a network **180** with a remote system **160** (e.g., a remote server or a cloud-based environment). Much like the computing system **140**, the remote system **160** includes remote computing resources such as remote data processing hardware **162** and remote memory hardware **164**. Here, sensor data **134** or other processed data (e.g., data processing locally by the computing system **140**) may be stored in the remote system **160** and may be accessible to the computing system **140**. In additional examples, the computing system **140** is configured to utilize the remote resources **162**, **164** as extensions of the computing resources **142**, **144** such that resources of the computing system **140** reside on resources of the remote system **160**.

[0042] In some implementations, as shown in FIGS. **1**A and **1**B, the robot **100** includes a control system **170**. The control system **170** may be configured to communicate with systems of the robot **100**, such as the at least one sensor system **130** and/or the navigation system **200**. The control system **170** may perform operations and other functions using hardware **140**. The control system **170** includes at least one controller **172** that is configured to control the robot **100**. For example, the controller **172** controls movement of the robot **100** to traverse about the environment **30** based on input or feedback from the systems of the robot **100** (e.g., the sensor system **130** and/or the control system **170**). In additional examples, the controller **172** controls movement between poses and/or behaviors of the robot **100**. The at least one controller **172** may be responsible for controlling movement of the arm **126** of the robot **100** in order for the arm **126** to perform various tasks using the end-effector **150**. For instance, at least one controller **172** controls the end-effector **150** (e.g., a gripper) to manipulate an object or element in the environment **30**. For example, the controller **172** actuates the movable jaw in a direction towards the fixed jaw to close the gripper. In other examples, the controller **172** actuates the movable jaw in a direction away from the fixed jaw to close the gripper.

[0043] A given controller **172** may control the robot **100** by controlling movement about one or more joints J of the robot **100**. In some configurations, the given controller **172** is implemented as software or firmware with programming logic that controls at least one joint J or a motor M which operates, or is coupled to, a joint J. A software application (i.e., a software resource) may refer to computer software that causes a computing device to perform a task. In some examples, a software application may be referred to as an "application," an "app," or a "program." For instance, the controller **172** controls an amount of force that is applied to a joint J (e.g., torque at a joint J). As programmable controllers **172**, the number of joints J that a controller **172** controls is scalable and/or customizable for a particular control purpose. A controller **172** may control a single joint J (e.g., control a torque at a single joint J), multiple joints J, or actuation of one or more members **128** (e.g., actuation of

the hand member **128**H) of the robot **100**. By controlling one or more joints J, actuators or motors M, the controller **172** may coordinate movement for all different parts of the robot **100** (e.g., the body **110**, one or more legs **120**, the arm **126**). For example, to perform some movements or tasks, a controller **172** may be configured to control movement of multiple parts of the robot **100** such as, for example, two legs **120***a-b*, four legs **120***a-d*, or two legs **120***a-b* combined with the arm **126**.

[0044] With continued reference to FIG. **1**B, an operator **12** (also referred to herein as a user or a client) may interact with the robot **100** via the remote controller **10** that communicates with the robot **100** to perform actions. For example, the operator **12** transmits commands **174** to the robot **100** (executed via the control system **170**) via a wireless communication network **16**. Additionally, the robot **100** may communicate with the remote controller **10** to display an image on a user interface **190** (e.g., UI **190**) of the remote controller **10**. For example, the UI **190** is configured to display the image that corresponds to three-dimensional field of view F_V of the one or more sensors **132**. The image displayed on the UI **190** of the remote controller **10** is a two-dimensional image that corresponds to the three-dimensional point cloud of sensor data **134** for the area within the environment **30** about the robot **100**. That is, the image displayed on the UI **190** may be a two-dimensional image representation that corresponds to the three-dimensional field of view F_V of the one or more sensors **132**.

[0045] Referring now to FIG. **2**A, the robot **100** (e.g., the data processing hardware **142**) executes the navigation system **200** for enabling the robot **100** to navigate the environment **30**. For example, the sensor system **130** includes one or more imaging sensors **132** (e.g., cameras) each of which captures image data or other sensor data **134** of the environment **30** surrounding the robot **100** within the field of view F_V. The sensor system **130** may be configured to move the field of view F_V of some or all of the sensors **130** by adjusting an angle of view or by panning and/or tilting (either independently or via the robot **100**) one or more sensors **132** to move the field of view F_V of the sensor(s) **132** in any direction. In some implementations, the sensor system **130** includes multiple sensors or cameras **132** such that the sensor system **130** captures a generally 360-degree field of view around the robot **100**. In some implementations, at least some of the sensors **130** in sensor system **130** have at least partially overlapping fields of view F_V.

[0046] In the example shown, the navigation system **200** includes a high-level navigation module **220** that receives map data **210** (e.g., high-level navigation data representative of locations of static obstacles in an area the robot **100** is to navigate). In some examples, the map data **210** includes a graph map **222**. In other examples, the high-level navigation module **220** generates the graph map **222**. The graph map **222** includes a topological map of a given area the robot **100** is to traverse. The high-level navigation module **220** obtains (e.g., from the remote system **160** or the remote controller **10**) or generates a series of route waypoints **310** on the graph map **222** for a navigation route **212** that plots a path around large and/or static obstacles from a start location (e.g., the current location of the robot **100**) to a destination as shown in FIG. **2**B. Route edges **312** connect corresponding pairs of adjacent route waypoints **310**. In some examples, the route edges **312** record geometric transforms between route waypoints **310** based on odometry data (i.e., data from motion sensors or image sensors to determine a change in the robot's position over time). The route waypoints **310** and the route edges **312** are representative of the navigation route **212** for the robot to follow from a start location to a destination location.

[0047] In some implementations, the high-level navigation module **220** produces the navigation route **212** over a greater than 10-meter scale (e.g., distances greater than 10 meters from the robot **100**). The navigation system **200** also includes a local navigation module **230** that receives the navigation route **212** and the image or sensor data **134** from the sensor system **130**. The local navigation module **230**, using the sensor data **134**, generates an obstacle map **232**. The obstacle map **232** is a robot-centered map that maps obstacles (both static and dynamic) in the vicinity of the robot **100** based on the sensor data **134**. For example, while the graph map **222** includes information relating to the locations of walls of a hallway, the obstacle map **232** (populated by the sensor data **134** as the robot **100** traverses the environment **30**) may include information regarding a stack of boxes placed in the hallway that may not have been present during the original recording. The size of the obstacle map **232** may be dependent upon both the operational range of the sensors **132** and the available computational resources.

[0048] The local navigation module **230** generates a step plan **240** (e.g., using an A* search algorithm) that plots each individual step (or other movement) of the robot **100** to navigate from the current location of the robot **100** to the next route waypoint **310** along the navigation route **212**. Using the step plan **240**, the robot **100** maneuvers through the environment **30**. The local navigation module **230** may find a path for the robot **100** to the next route waypoint **310** using an obstacle grid map based on the captured sensor data **134**. In some examples, the local navigation module **230** operates on a range correlated with the operational range of the sensor **132** (e.g., four meters) that is generally less than the scale of high-level navigation module **220**.

[0049] In some implementations, the graph map **222** includes information related to one or more fiducial markers **350**. Each fiducial marker **350** may correspond to an object that is placed within the field of sensing of the robot **100**, and the robot **100** may use the fiducial marker **350** as a fixed point of reference. Non-limiting examples of fiducial marker **350** include a bar code, a QR-code, an AprilTag, or other readily identifiable pattern or shape for the robot **100** to recognize. When placed in the environment of the robot, fiducial markers **350** may aid in navigation and/or localization through the environment.

[0050] During operation, a set of extrinsics parameters for one or more cameras included in the sensor module **130** of a robot can degrade, resulting in performance issues for the robot, such as reduced localization accuracy, poor fiducial detection accuracy, and unreliable robot docking. For instance, the camera(s) may be mounted on a substrate, such as a printed circuit board (PCB), and the substrate may bend or otherwise mechanically deform due to changes in temperature or other factors. Additionally, due to mechanical deformation and/or thermal expansion/contraction, the projection of incident light provided from the lens of a camera to the image sensor may change, resulting in a miscalibration of the camera.

[0051] Recalibration of the set of extrinsics parameters for a camera mounted on a robot is performed in some existing

systems by removing the camera from the robot, placing the camera in a calibration test apparatus, and executing an explicit calibration routine using a particular calibration target. Use of such a manual calibration technique can be undesirable as it can result in downtime for the robot. Some embodiments of the present disclosure relate to techniques for detecting when a current set of extrinsics parameters being used by a robot has degraded sufficiently such that recalibration of the set of extrinsics parameters is needed. Upon determining that recalibration is needed, some embodiments then perform an action, such as generating an alert or performing online camera calibration using one or more of the techniques described herein.

[0052] Rather that requiring a robot to perform an explicit calibration routine using a particular calibration target, some embodiments of the present disclosure assess degradation of a current set of extrinsics parameters used by a robot, at least in part, using image data captured during normal operation of the robot, resulting in little or no downtime for the robot. For instance, one or more cameras of a robot may be configured to capture images that include an object (e.g., fiducial marker **350**) having at least one known dimension (e.g., a sign having one or more known dimensions), wherein the object is located in the environment through which a robot travels. As described herein fiducial markers **350** may be captured in images during routine operation of the robot for localization and/or navigation purposes. Some implementations of the techniques described herein repurpose this information already being collected by the robot to assess, and in some instances, automatically correct miscalibration of a camera.

[0053] FIG. **3**A illustrates a first image **300** captured by a first camera (Camera A) of a robot and a second image **305** captured by a second camera (Camera B) of the robot. Each of the first image **300** and the second image **305** includes the same fiducial marker **350**, located at slightly different positions in the image. In this example, Camera A may be a visual camera (e.g., an RGB camera) and Camera B may be a stereo camera, such that the images captured by Camera A and Camera B may be used to generate a three-dimensional point cloud of objects in the environment. It should be appreciated however, that any camera configured to capture images of the environment of the robot may be used in accordance with the calibration techniques described herein. Camera A and Camera B are arranged to have at least partially overlapping fields of view, such that the first image **300** and the second image **305**, when captured at the same time (or substantially the same time), both include fiducial marker **350**. Due to the partially overlapping fields of view of the two cameras, the location of the fiducial marker **350** in the first image **300** and the second image **305** when projected from one image to the other (e.g., projected from the first image **300** to the second image **305**) should be the same when the current set of extrinsics parameters relating the two cameras and used for the projection is accurate (e.g., has not been degraded). However, as shown schematically in FIG. **3**A, when the current set of extrinsics parameters relating camera A and camera B is degraded, the location of the fiducial marker **350** within the images is different. Some embodiments of the present disclosure relate to a process for detecting an amount of calibration error for a camera based on the extent to which there is a position offset of an object having at least one known dimension (e.g., a fiducial marker **350**) in two images simultaneously (or near simultaneously) captured by cameras having at least partial overlapping fields of view.

[0054] FIG. **4** illustrates a process **400** for determining a calibration error of a first camera relative to a second camera of a mobile robot, in accordance with some embodiments. In act **410**, a first image captured by a first camera of a robot is received. The first image includes an object, such as a fiducial marker, that has at least one known dimension. Process **400** then proceeds to act **420**, where a second image captured by a second camera of the robot is received. The second camera has at least a partially overlapping field of view as the first camera such that the second image also includes the object included in the first image. In some implementations, the first camera and the second camera may be mounted on a common substrate (e.g., a printed circuit board) incorporated into a sensor module of the robot (e.g., sensor module **130** of robot **100** described in FIG. **1**A). Although shown as sequential acts in process **400**, it should be appreciated that act **410** and act **420** may be performed simultaneously or near simultaneously (e.g., within several milliseconds) in any order. For instance, in some implementations, when a fiducial marker is detected in the first image captured by the first camera, a controller configured to control operation of the second camera may instruct the second camera to capture the second image at substantially the same time.

[0055] After receiving the first image and the second image, process **400** proceeds to act **430**, where a plurality of points on the object (e.g., the fiducial marker) in the first image are projected from the first image to the second image. Any suitable number of points (e.g., two or more points) on the object may be projected from the first image to the second image. A current set of extrinsics parameters (e.g., in persistent storage of the robot) relating a coordinate system of images captured by Camera A and a coordinate system of images captured by Camera B may be used to project the plurality of point on the object from the first image to the second image.

[0056] FIG. **3**B schematically illustrates a process for projecting a plurality of points on an object captured in a first image to a second image. The fiducial marker **350** included in the first image captured by camera A includes four corner points A**1**, A**2**, A**3**, A**4**. Each of the four corner points is projected to corresponding pixel locations A**1'**, A**2'**, A**3'**, A**4'** in the second image (labeled Camera B in FIG. **3**B) using, for example, a current set of extrinsics parameters. Although shown as being projected in two dimensions, it should be appreciated that in some embodiments, the projection of the plurality of points may occur in three dimensions. It should also be appreciated that the object from which the plurality of points is projected may have any suitable shape, provided that at least one dimension of the object is known. In some existing techniques for performing automatic calibration of a camera, the calibration is performed using natural features of the environment. The inventors have recognized that variations in textures and other features of the environment, when not taken into account by the calibration technique, may result in poor calibration of camera extrinsic parameters. To this end, the techniques described herein for assessing a calibration error of a camera rely on detection of objects, such as fiducial markers with at least one known or standardized dimension, to reduce or eliminate the effect of such variations in the environment.

[0057] Following projection of the plurality of points on an object included in a first image to pixel locations (or voxel locations in a three-dimensional projection) in a second image, process **400** proceeds to act **440**, where a calibration error (also referred herein as a "reprojection error") is determined based on the plurality of points on the object in the second image and the pixel locations of the projected plurality of points on the object from the first image. The "Camera B" representation shown in FIG. **3**B shows the pixel locations of the four corners of the object labeled as B**1**, B**2**, B**3**, and B**4** in the second image and the pixel locations A**1'**, A**2'**, A**3'**, A**4'** corresponding to the projected points of the same four corners of the object from the first image. In some implementations the points on the object B**1**, B**2**, B**3**, B**4** may be identified within a region of interest (ROI) defined based on the pixel locations A**1'**, A**2'**, A**3'**, A**4'** corresponding to the projected points of the same four corners of the object from the first image. That is, rather than having to search the entire second image for the object, which may be computationally expensive, some implementations project the points A**1**, A**2**, A**3**, A**4** from the first image to the second image and, based on the pixel locations A**1'**, A**2'**, A**3'**, A**4'** of the projected points define an ROI within the second image to search for the object (e.g., a slightly larger region of the second image within which pixel locations A**1'**, A**2'**, A**3'**, A**4'** fall. By searching a smaller region of the second image for the object, the process of identifying the object in the second image and its corresponding points B**1**, B**2**, B**3**, B**4** is quicker and uses less computational resources than if the entire second image was searched.

[0058] In some embodiments, the reprojection error is determined based, at least in part, on a distance between the pixel locations of the projected points A**1'**, A**2'**, A**3'**, A**4'** and the corresponding points B**1**, B**2**, B**3**, B**4** in the second image. In the example of FIG. **3**B, the corresponding distances are labeled D**1**, D**2**, D**3**, D**4** for the pairs of object points and projected object points. In some implementations, the reprojection error may be determined as an average of the distances for each of the points on the object (e.g., an average of distances D**1**, D**2**, D**3**, D**4**). In some implementations, the distances for each of the points on the object may be normalized to at least partially account for differences in the incident angle of the cameras relative to the object. For instance, in some implementations a longest side of the object may be determined, and each of the distances (e.g., D**1**, D**2**, D**3**, D**4**) may be divided by the length of the longest side to generate normalized distances. The reprojection error may then be determined as an average of the normalized distances. Although the distances D**1**, D**2**, D**3**, D**4** are shown as distances calculated in two dimensions, it should be appreciated that when the object points from the first image are projected in three dimensions, the distances may be calculated in three dimensions.

[0059] After determining the reprojection error, process **400** proceeds to act **450**, where an action is performed when the reprojection error is greater than a threshold value. The threshold value may be set in any suitable way. For instance, the threshold value may be set based on one or more dimensions of the object (e.g., a fiducial marker) in the first and second images. When the reprojection error exceeds the threshold value, it is an indication that recalibration of the current set of extrinsics parameters should be performed. The action performed in act **450** may depend on the particular implementation. For instance, in some implementations, the action may be to output an alert to an operator of the robot (e.g., via remote controller **10** or an indicator on the robot) to instruct the operator that the cameras should be recalibrated. In some implementations, the robot may be configured to perform autonomous navigation through an environment using the techniques described herein. In such implementations, the action performed in act **450** may be to control the robot to stop autonomous navigation until the cameras can be recalibrated. Stopping autonomous navigation of the robot while the cameras are determined to be miscalibrated by a certain amount may help facilitate accurate navigation of the robot through the environment.

[0060] In some implementations, the action performed in act **450** may include performing an online camera calibration. An example of performing an online camera calibration in accordance with some embodiments is described in more detail with regard to FIG. **5**. In some implementations, the action performed in act **450** includes performing multiple actions. For instance, an alert may be output to the operator of the robot and online camera calibration may be performed using one or more of the techniques described herein.

[0061] FIG. **5** illustrates a process **500** for performing an online camera calibration in accordance with some embodiments. In act **510**, multiple images of an object (e.g., a fiducial marker) having at least one known dimension is captured by at least two cameras of a sensor module of a robot. For instance, a first set of first images captured by a first camera and a second set of second images captured simultaneously or near simultaneously by a second camera may be stored, with each of the images in the first set and the second set including the object. In some implementations, camera systems on the robot may be configured to capture images of the environment at a predetermined frequency (e.g., 1 Hz, 2 Hz, 5 Hz) during its normal operation while navigating through an environment. Some of the captured images may include the object (e.g., a fiducial marker) located in the environment. When a fiducial marker is detected in a first image from a first camera, a second camera with at least partial overlapping field of view with the first camera may be controlled to capture a second image also including the same object. The first image and the second image may form a pair of images used to perform online camera calibration, with the first image being included in the first set and the second image being included in the second set. Additional first and second images may be captured and included in the first set and the second set, for example, as the robot navigates through the environment and encounters more instances of the object (e.g., a fiducial marker).

[0062] Process **500** then proceeds to act **520**, where it is determined whether to perform an optimization based on the captured data in the first set and the second set. The determination of whether to optimize may be made in any suitable way. For instance, in some implementations, a threshold amount of images in the first set and the second set may be required prior to performing optimization. In some implementations, a particular variation and/or distribution of locations and/or angles of the object in the captured images may be required prior to performing optimization. Any other suitable metrics may additionally or alternatively be used to determine whether the captured images in the first set and the second set provide sufficient data to perform optimization. If it is determined in act **520** that optimization is not to be performed, process **500** returns to act **510**, where additional images including the object are captured until it is

determined in act **520** that the images in the first set and the second set are sufficient to perform an optimization.

[0063] As described herein, in processing images captured by a first camera (e.g., a visual camera) and second camera (e.g., a depth camera) to generate a three-dimensional representation of objects in an environment, a set of extrinsics parameters (also referred to herein as an "extrinsics transform") may be stored by a storage device (e.g., in a configuration file) of the robot to relate the coordinate systems of images captured by the first camera and the second camera. The stored extrinsics transform may be used by various systems of the robot to compute, among other things, the pose of the robot. When cameras are "misconfigured," the extrinsics transform used by the robot to align the coordinate systems of the images captured by the cameras may not provide a sufficiently accurate result (e.g., the pose determined using the extrinsics transform may not be sufficiently accurate). By updating the stored extrinsics transform used by the robot using one or more optimization techniques as described herein, the cameras can be considered "recalibrated" such that the updated extrinsics transform, when used by the robot generates a more accurate result than if the extrinsics transform was not updated.

[0064] When it is determined in act **520** that optimization is to be performed, process **500** proceeds to act **530**, where the images in the first and second set are provided as input to an optimization routine. Non-limiting examples of optimization routines that may be used in accordance with some embodiments include nonlinear least squares techniques (e.g., Levenberg-Marquardt optimization) and sparse optimization techniques. As described above, the optimization routine may be configured to output an updated extrinsics transform that relates the coordinate systems of the first and second cameras, and may be used, for example, to determine the pose of the robot. To determine the updated extrinsics transform, the optimization routine may be configured to minimize a reprojection error calculated when points on an object are projected from a first image in the first set to pixel locations in the corresponding second image in the second set. Process **500** then proceeds to act **540**, where an optimal extrinsics transform that minimizes the reprojection error is output from the optimization routine. Including a variety of images in the first set and second set in which the object is viewed from different angles and positions within the images may help ensure that the optimal extrinsics transform output from the optimization routine generalizes over a broad range of image capture scenarios.

[0065] Process **500** then proceeds to act **550**, where online camera calibration is performed by updating the current set of extrinsics parameters used by the robot to, for example, determine a pose of the robot. Updating the current set of extrinsics parameters may be performed in some instances by updating a configuration file that stores the current set of extrinsics parameters for use by one or more systems of the robot.

[0066] It should be appreciated that in some embodiments, the optimization routine may be configured to additionally or alternatively output a different metric other than an optimal extrinsics transform. For instance, the optimization routine may additionally or alternatively be configured to output one or more parameters (e.g., a focal length, a principal point, one or more distortion coefficients) for an optimal lens model (e.g., a pinhole camera model) for one or both of the first and second cameras.

[0067] In some implementations, the online camera calibration processes described herein are performed "in the background" such that the operator of the robot is not made aware that the calibration is being periodically assessed and updated automatically. In some implementations, each time online recalibration is performed, information regarding the recalibration may be stored on a storage device (e.g., in a log file) of the robot to save a record of aspects of the recalibration.

[0068] FIG. **6** illustrates an example configuration of a robotic device (or "robot") **600**, according to some embodiments. The robotic device **600** may, for example, correspond to the robot **100** described above. The robotic device **600** represents an illustrative robotic device configured to perform any of the techniques described herein. The robotic device **600** may be configured to operate autonomously, semi-autonomously, and/or using directions provided by user(s), and may exist in various forms, such as a humanoid robot, biped, quadruped, or other mobile robot, among other examples. Furthermore, the robotic device **600** may also be referred to as a robotic system, mobile robot, or robot, among other designations.

[0069] As shown in FIG. **6**, the robotic device **600** may include processor(s) **602**, data storage **604**, program instructions **606**, controller **608**, sensor(s) **610**, power source(s) **612**, mechanical components **614**, and electrical components **616**. The robotic device **600** is shown for illustration purposes and may include more or fewer components without departing from the scope of the disclosure herein. The various components of robotic device **600** may be connected in any manner, including via electronic communication means, e.g., wired or wireless connections. Further, in some examples, components of the robotic device **1000** may be positioned on multiple distinct physical entities rather on a single physical entity.

[0070] The processor(s) **602** may operate as one or more general-purpose processor or special purpose processors (e.g., digital signal processors, application specific integrated circuits, etc.). The processor(s) **602** may, for example, correspond to the data processing hardware **142** of the robot **100** described above. The processor(s) **602** can be configured to execute computer-readable program instructions **606** that are stored in the data storage **604** and are executable to provide the operations of the robotic device **600** described herein. For instance, the program instructions **606** may be executable to provide operations of controller **608**, where the controller **608** may be configured to cause activation and/or deactivation of the mechanical components **614** and the electrical components **616**. The processor(s) **602** may operate and enable the robotic device **600** to perform various functions, including the functions described herein.

[0071] The data storage **604** may exist as various types of storage media, such as a memory. The data storage **604** may, for example, correspond to the memory hardware **144** of the robot **100** described above. The data storage **604** may include or take the form of one or more non-transitory computer-readable storage media that can be read or accessed by processor(s) **602**. The one or more computer-readable storage media can include volatile and/or non-volatile storage components, such as optical, magnetic, organic or other memory or disc storage, which can be integrated in whole or in part with processor(s) **602**. In some implementations, the data storage **604** can be implemented using a single physical device (e.g., one optical, magnetic,

organic or other memory or disc storage unit), while in other implementations, the data storage **604** can be implemented using two or more physical devices, which may communicate electronically (e.g., via wired or wireless communication). Further, in addition to the computer-readable program instructions **606**, the data storage **1004** may include additional data such as diagnostic data, among other possibilities.

[0072] The robotic device **600** may include at least one controller **608**, which may interface with the robotic device **600** and may be either integral with the robotic device, or separate from the robotic device **600**. The controller **608** may serve as a link between portions of the robotic device **600**, such as a link between mechanical components **614** and/or electrical components **616**. In some instances, the controller **608** may serve as an interface between the robotic device **600** and another computing device. Furthermore, the controller **608** may serve as an interface between the robotic system **600** and a user(s). The controller **608** may include various components for communicating with the robotic device **600**, including one or more joysticks or buttons, among other features. The controller **608** may perform other operations for the robotic device **600** as well. Other examples of controllers may exist as well.

[0073] Additionally, the robotic device **600** may include one or more sensor(s) **610** such as image sensors, force sensors, proximity sensors, motion sensors, load sensors, position sensors, touch sensors, depth sensors, ultrasonic range sensors, and/or infrared sensors, or combinations thereof, among other possibilities. The sensor(s) **610** may, for example, correspond to the sensors **132** of the robot **100** described above. The sensor(s) **610** may provide sensor data to the processor(s) **602** to allow for appropriate interaction of the robotic system **600** with the environment as well as monitoring of operation of the systems of the robotic device **600**. The sensor data may be used in evaluation of various factors for activation and deactivation of mechanical components **614** and electrical components **616** by controller **608** and/or a computing system of the robotic device **600**.

[0074] The sensor(s) **610** may provide information indicative of the environment of the robotic device for the controller **608** and/or computing system to use to determine operations for the robotic device **600**. For example, the sensor(s) **610** may capture data corresponding to the terrain of the environment or location of nearby objects, which may assist with environment recognition and navigation, etc. In an example configuration, the robotic device **600** may include a sensor system that may include a camera, RADAR, LIDAR, time-of-flight camera, global positioning system (GPS) transceiver, and/or other sensors for capturing information of the environment of the robotic device **600**. The sensor(s) **610** may monitor the environment in real-time and detect obstacles, elements of the terrain, weather conditions, temperature, and/or other parameters of the environment for the robotic device **600**.

[0075] Further, the robotic device **600** may include other sensor(s) **610** configured to receive information indicative of the state of the robotic device **600**, including sensor(s) **610** that may monitor the state of the various components of the robotic device **600**. The sensor(s) **610** may measure activity of systems of the robotic device **600** and receive information based on the operation of the various features of the robotic device **600**, such as the operation of extendable legs, arms, or other mechanical and/or electrical features of the robotic device **600**. The sensor data provided by the sensors may enable the computing system of the robotic device **600** to determine errors in operation as well as monitor overall functioning of components of the robotic device **600**.

[0076] For example, the computing system may use sensor data to determine the stability of the robotic device **600** during operations as well as measurements related to power levels, communication activities, components that require repair, among other information. As an example configuration, the robotic device **600** may include gyroscope(s), accelerometer(s), and/or other possible sensors to provide sensor data relating to the state of operation of the robotic device. Further, sensor(s) **610** may also monitor the current state of a function, such as a gait, that the robotic system **600** may currently be operating. Additionally, the sensor(s) **610** may measure a distance between a given robotic leg of a robotic device and a center of mass of the robotic device. Other example uses for the sensor(s) **610** may exist as well.

[0077] Additionally, the robotic device **600** may also include one or more power source(s) **612** configured to supply power to various components of the robotic device **600**. Among possible power systems, the robotic device **600** may include a hydraulic system, electrical system, batteries, and/or other types of power systems. As an example illustration, the robotic device **600** may include one or more batteries configured to provide power to components via a wired and/or wireless connection. Within examples, components of the mechanical components **614** and electrical components **616** may each connect to a different power source or may be powered by the same power source. Components of the robotic system **600** may connect to multiple power sources as well.

[0078] Within example configurations, any suitable type of power source may be used to power the robotic device **600**, such as a gasoline and/or electric engine. Further, the power source(s) **612** may charge using various types of charging, such as wired connections to an outside power source, wireless charging, combustion, or other examples. Other configurations may also be possible. Additionally, the robotic device **600** may include a hydraulic system configured to provide power to the mechanical components **614** using fluid power. Components of the robotic device **600** may operate based on hydraulic fluid being transmitted throughout the hydraulic system to various hydraulic motors and hydraulic cylinders, for example. The hydraulic system of the robotic device **600** may transfer a large amount of power through small tubes, flexible hoses, or other links between components of the robotic device **600**. Other power sources may be included within the robotic device **600**.

[0079] Mechanical components **614** can represent hardware of the robotic system **600** that may enable the robotic device **600** to operate and perform physical functions. As a few examples, the robotic device **600** may include actuator (s), extendable leg(s) ("legs"), arm(s), wheel(s), one or multiple structured bodies for housing the computing system or other components, and/or other mechanical components. The mechanical components **614** may depend on the design of the robotic device **600** and may also be based on the functions and/or tasks the robotic device **600** may be configured to perform. As such, depending on the operation and functions of the robotic device **600**, different mechanical components **614** may be available for the robotic device **600** to utilize. In some examples, the robotic device **600** may be configured to add and/or remove mechanical components

614, which may involve assistance from a user and/or other robotic device. For example, the robotic device **600** may be initially configured with four legs, but may be altered by a user or the robotic device **600** to remove two of the four legs to operate as a biped. Other examples of mechanical components **614** may be included.

[0080] The electrical components **616** may include various components capable of processing, transferring, providing electrical charge or electric signals, for example. Among possible examples, the electrical components **616** may include electrical wires, circuitry, and/or wireless communication transmitters and receivers to enable operations of the robotic device **600**. The electrical components **616** may interwork with the mechanical components **614** to enable the robotic device **600** to perform various operations. The electrical components **616** may be configured to provide power from the power source(s) **612** to the various mechanical components **614**, for example. Further, the robotic device **600** may include electric motors. Other examples of electrical components **616** may exist as well.

[0081] In some implementations, the robotic device **600** may also include communication link(s) **618** configured to send and/or receive information. The communication link(s) **618** may transmit data indicating the state of the various components of the robotic device **600**. For example, information read in by sensor(s) **610** may be transmitted via the communication link(s) **618** to a separate device. Other diagnostic information indicating the integrity or health of the power source(s) **612**, mechanical components **614**, electrical components **618**, processor(s) **602**, data storage **604**, and/or controller **608** may be transmitted via the communication link(s) **618** to an external communication device.

[0082] In some implementations, the robotic device **600** may receive information at the communication link(s) **618** that is processed by the processor(s) **602**. The received information may indicate data that is accessible by the processor(s) **602** during execution of the program instructions **606**, for example. Further, the received information may change aspects of the controller **608** that may affect the behavior of the mechanical components **614** or the electrical components **616**. In some cases, the received information indicates a query requesting a particular piece of information (e.g., the operational state of one or more of the components of the robotic device **600**), and the processor(s) **602** may subsequently transmit that particular piece of information back out the communication link(s) **618**.

[0083] In some cases, the communication link(s) **618** include a wired connection. The robotic device **600** may include one or more ports to interface the communication link(s) **618** to an external device. The communication link(s) **618** may include, in addition to or alternatively to the wired connection, a wireless connection. Some example wireless connections may utilize a cellular connection, such as CDMA, EVDO, GSM/GPRS, or 4G telecommunication, such as WiMAX or LTE. Alternatively or in addition, the wireless connection may utilize a Wi-Fi connection to transmit data to a wireless local area network (WLAN). In some implementations, the wireless connection may also communicate over an infrared link, radio, Bluetooth, or a near-field communication (NFC) device.

[0084] The above-described embodiments can be implemented in any of numerous ways. For example, the embodiments may be implemented using hardware, software or a combination thereof. When implemented in software, the software code can be executed on any suitable processor or collection of processors, whether provided in a single computer or distributed among multiple computers. It should be appreciated that any component or collection of components that perform the functions described above can be generically considered as one or more controllers that control the above-described functions. The one or more controllers can be implemented in numerous ways, such as with dedicated hardware or with one or more processors programmed using microcode or software to perform the functions recited above.

[0085] Various aspects of the present technology may be used alone, in combination, or in a variety of arrangements not specifically described in the embodiments described in the foregoing and are therefore not limited in their application to the details and arrangement of components set forth in the foregoing description or illustrated in the drawings. For example, aspects described in one embodiment may be combined in any manner with aspects described in other embodiments.

[0086] Also, some embodiments may be implemented as one or more methods, of which an example has been provided. The acts performed as part of the method(s) may be ordered in any suitable way. Accordingly, embodiments may be constructed in which acts are performed in an order different than illustrated, which may include performing some acts simultaneously, even though shown as sequential acts in illustrative embodiments.

[0087] Use of ordinal terms such as "first," "second," "third," etc., in the claims to modify a claim element does not by itself connote any priority, precedence, or order of one claim element over another or the temporal order in which acts of a method are performed. Such terms are used merely as labels to distinguish one claim element having a certain name from another element having a same name (but for use of the ordinal term).

[0088] The phraseology and terminology used herein is for the purpose of description and should not be regarded as limiting. The use of "including," "comprising," "having," "containing," "involving," and variations thereof, is meant to encompass the items listed thereafter and additional items.

[0089] Having described several embodiments in detail, various modifications and improvements will readily occur to those skilled in the art. Such modifications and improvements are intended to be within the spirit and scope of the technology. Accordingly, the foregoing description is by way of example only, and is not intended as limiting.

What is claimed is:

1. A method, comprising:

receiving a first image captured by a first camera of a robot, wherein the first image includes an object having at least one known dimension;

receiving a second image captured by a second camera of the robot, wherein the second image includes the object, wherein a field of view of the first camera and a field of view of the second camera at least partially overlap;

projecting a plurality of points on the object in the first image to pixel locations in the second image; and

determining, based on pixel locations of the plurality of points on the object in second image and the projected plurality of points on the object, a reprojection error.

2. The method of claim 1, wherein the object includes a plurality of corner points, and wherein the plurality of points on the object projected to pixel locations in the second image includes at least two of the plurality of corner points.

3. The method of claim 2, wherein the object is a rectangle having four corner points, and wherein the plurality of points on the object projected to pixel locations in the second image includes the four corner points of the rectangle.

4. The method of claim 1, wherein the object is a fiducial marker in an environment of the robot.

5. The method of claim 4, wherein the fiducial marker is an AprilTag.

6. The method of claim 1, wherein determining the reprojection error comprises:

calculating, for each of the plurality of points on the object, a first distance between the point on the object in the second image and the pixel location of the corresponding projected point in the second image; and

determining the reprojection error based on the calculated first distances.

7. The method of claim 6, wherein determining the reprojection error based on the calculated distances comprises:

calculating a second distance of a longest edge of the object along two of the plurality of points on the object;

dividing each of the calculated first distances by the second distance to generate normalized first distances; and

determining the reprojection error as an average of the normalized first distances.

8. The method of claim 1, wherein the first camera is a vision camera and the second camera is a depth camera.

9. The method of claim 8, wherein the depth camera is a stereo vision camera.

10. The method of claim 1, further comprising:

generating an instruction to perform an action when the reprojection error is greater than a threshold value.

11. The method of claim 10, wherein generating an instruction to perform an action when the reprojection error is greater than a threshold value comprises generating an alert.

12. The method of claim 10, wherein generating an instruction to perform an action when the reprojection error is greater than a threshold value comprises generating an instruction to stop autonomous navigation of the robot.

13. The method of claim 10, wherein generating an instruction to perform an action comprises generating an instruction to calibrate one or more parameters associated with the first camera and/or the second camera based on the reprojection error.

14. The method of claim 13, wherein calibrating one or more parameters associated with the first camera and/or the second camera comprises updating a lens model for the first camera and/or the second camera.

15. The method of claim 13, wherein

the robot is configured to use an extrinsics transform to relate a first coordinate system of the first camera to a second coordinate system of the second camera, and

calibrating one or more parameters associated with the first camera and/or the second camera comprises updating the extrinsics transform.

16. The method of claim 15, wherein updating the extrinsics transform comprises:

capturing a set of first images from the first camera, wherein each of the first images in the set includes the object;

capturing a set of second images from the second camera, wherein each of the second images in the set includes the object, each of the first images having a corresponding second image in the set of second image taken at a same time as the first image using a same pose;

performing a non-linear optimization over the first set of images and the second set of images to minimize the reprojection error for pairs of images from the first set and the second set, wherein an output of the non-linear optimization is a current extrinsics transform; and

updating the extrinsics transform used by the robot based on the current extrinsics transform output from the non-linear optimization.

17. The method of claim 15, further comprising:

determining a pose of the robot using the updated extrinsics transform.

18. A robot, comprising:

a perception system including:

a first camera configured to capture a first image, wherein the first image includes an object having at least one known dimension; and

a second camera configured to capture a second image, wherein the second image includes the object, wherein a field of view of the first camera and a field of view of the second camera at least partially overlap; and

at least one computer processor configured to:

project a plurality of points on the object in the first image to pixel locations in the second image; and

determine, based on pixel locations of the plurality of points on the object in second image and the projected plurality of points on the object, a reprojection error.

19. The robot of claim 18, wherein the object includes a plurality of corner points, and wherein the plurality of points on the object projected to pixel locations in the second image includes at least two of the plurality of corner points.

20-35. (canceled)

36. A non-transitory computer readable medium encoded with a plurality of instructions that, when executed by at least one computer processor perform a method, the method comprising:

receiving a first image captured by a first camera of a robot, wherein the first image includes an object having at least one known dimension;

receiving a second image captured by a second camera of the robot, wherein the second image includes the object, wherein a field of view of the first camera and a field of view of the second camera at least partially overlap;

projecting a plurality of points on the object in the first image to pixel locations in the second image; and

determining, based on pixel locations of the plurality of points on the object in second image and the projected plurality of points on the object, a reprojection error.

37-52. (canceled)

* * * * *